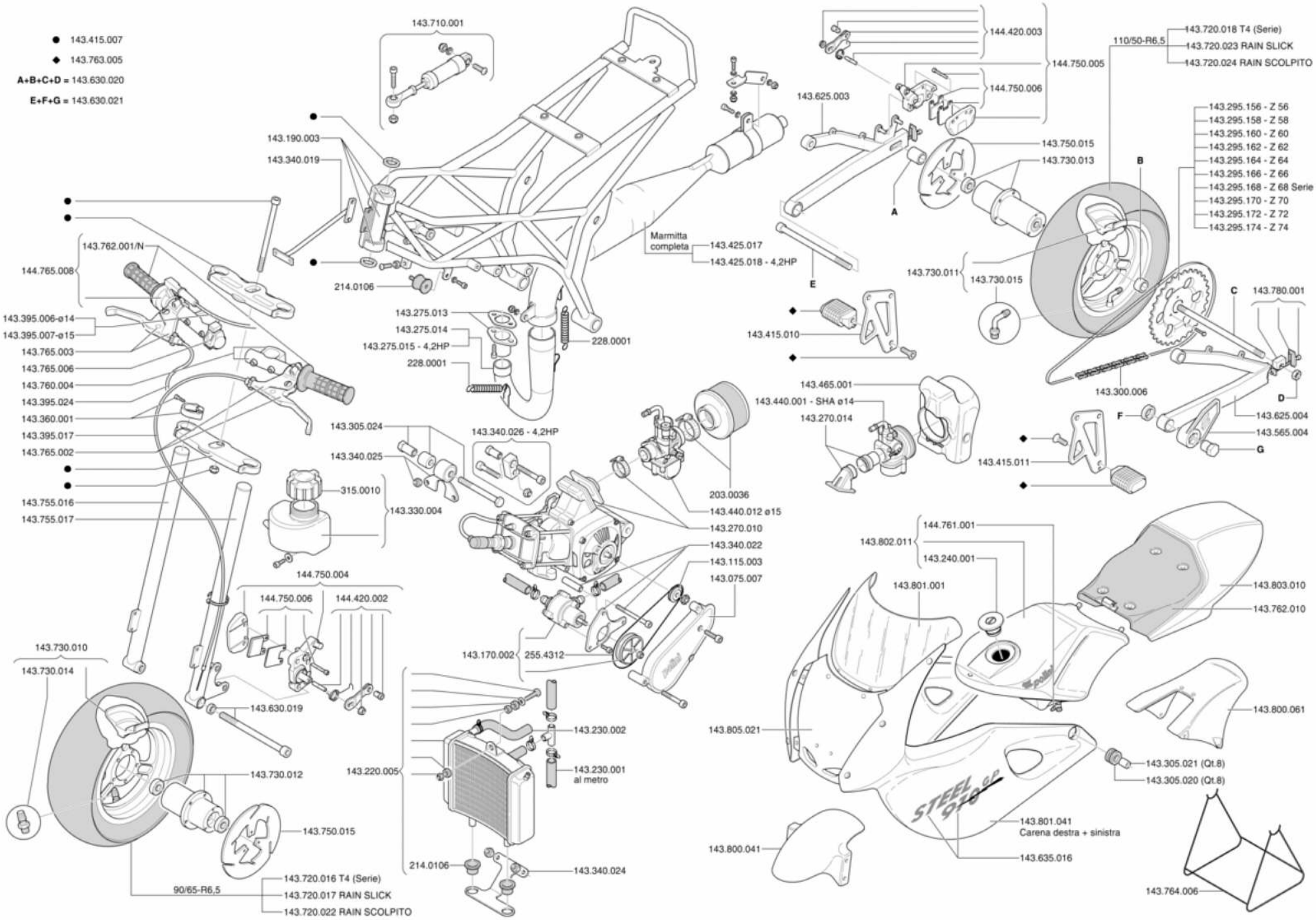
● 143.415.007
◆ 143.763.005
A+B+C+D = 143.630.020
E+F+G = 143.630.021
143.710.001
143.190.003
143.340.019
143.762.001/N
144.765.008
214.0106
143.395.006-ø14
143.395.007-ø15
143.765.003
143.765.006
143.760.004
143.395.024
143.360.001
143.395.017
143.765.002
143.755.016
143.755.017
143.275.013
143.275.014
143.275.015 - 4,2HP
228.0001
228.0001
Marmitta completa
143.425.017
143.425.018 - 4,2HP
E
143.625.003
144.420.003
144.750.005
144.750.006
143.750.015
143.730.013
A
110/50-R6,5
143.720.018 T4 (Serie)
143.720.023 RAIN SLICK
143.720.024 RAIN SCOLPITO
143.295.156 - Z 56
143.295.158 - Z 58
143.295.160 - Z 60
143.295.162 - Z 62
143.295.164 - Z 64
143.295.166 - Z 66
143.295.168 - Z 68 Serie
143.295.170 - Z 70
143.295.172 - Z 72
143.295.174 - Z 74
B
143.730.011
143.730.015
C
143.780.001
143.415.010
143.300.006
D
F
143.625.004
143.565.004
G
143.465.001
143.440.001 - SHA ø14
143.270.014
143.415.011
143.305.024
143.340.025
143.340.026 - 4,2HP
315.0010
143.330.004
203.0036
143.440.012 ø15
143.270.010
143.340.022
143.115.003
143.075.007
143.170.002
255.4312
144.750.004
144.750.006
144.420.002
143.630.019
143.730.010
143.730.014
143.730.012
143.750.015
90/65-R6,5
143.720.016 T4 (Serie)
143.720.017 RAIN SLICK
143.720.022 RAIN SCOLPITO
143.220.005
143.230.002
143.230.001
al metro
214.0106
143.340.024
143.802.011
144.761.001
143.240.001
143.801.001
143.803.010
143.762.010
143.800.061
143.805.021
143.305.021 (Qt.8)
143.305.020 (Qt.8)
STEEL 916 GP
143.801.041
Carena destra + sinistra
143.635.016
143.800.041
143.764.006